NOTES: UNLESS OTHERWISE SPECIFIED

1. NOTES

REVISIONS				
ZONE	SYM	DESCRIPTION	DATE	APPROVAL
	–	RELEASED FOR MANUFACTURING		

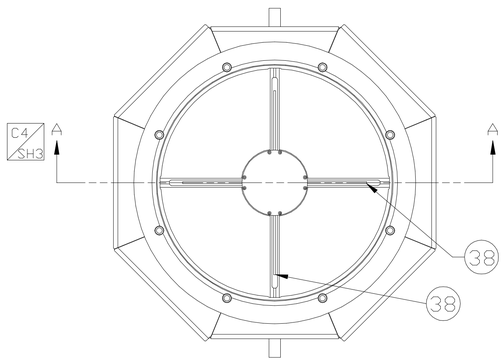

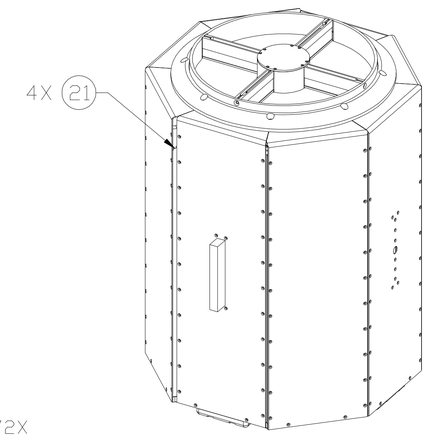

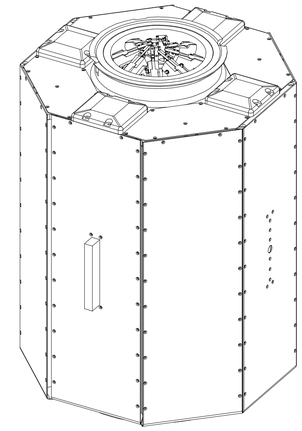

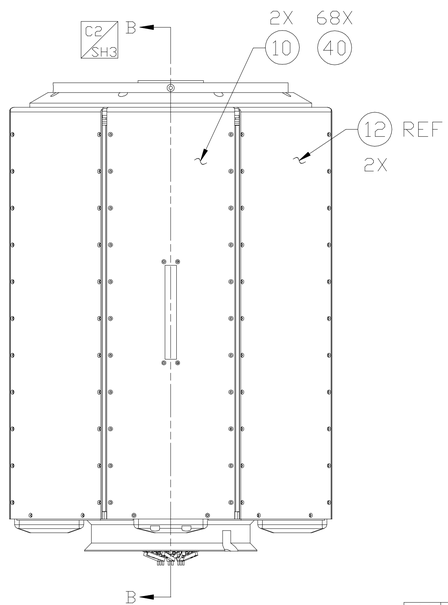

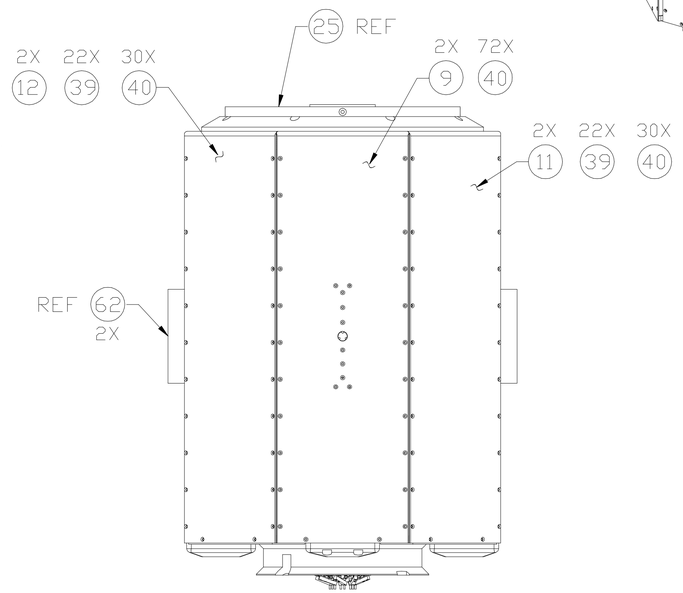

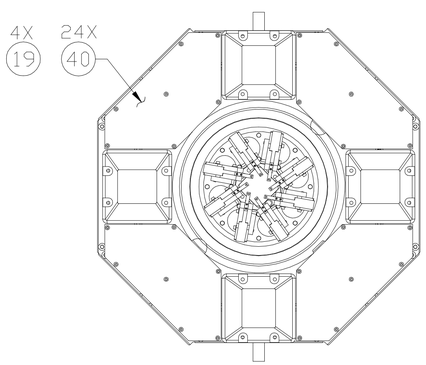

ITEM	REQD	REQD	PART NO	DESCRIPTION	MATERIAL
66		1	2020094	BATTERY ELECTRONICS BOX	–
65		4	–	#8 WASHER	–
64		1	AX–1	CCD CAMERA, APOGEE INSTRUMENTS	–
63		1	MDM–700	RF MODEM, AYDIN–VECTOR	–
62		2	47TT–4016L	RF ANTENNA, PHYSICAL SCIENCE LABS	–
61		40	MS21043–3	#10–32 SELF LOCKING HEX NUT	–
60		4	NAS671C10	#10–32 HEX NUT	–
59		8	CLS–632–2	#6–32 PEM NUT	–
58		12	MS21043–04	#4–40 SELF LOCKING HEX NUT	–
57		56	NAS1149C0363R	#10 WASHER	–
56		4	NAS1149–N632	#6 WASHER	–
55		24	NAS1149CN432	#4 WASHER	–
54		16	NAS1351C3–16	#10–32x1" SHC	–
53		16	MS24693–C73	#10–24x7/8" FH SCREW 100 DEG	–
52		16	MS24693–C274	#10–32x3/4 FH SCREW 100 DEG	–
51		4	NAS1352N3–12	#10–24x3/4" SHC	–
50		8	NAS1351C3–8	#10–32x1/2" SHC	–
49		4	MS1352C08–6	#8–32x3/8" SHC	–
48		8	MS51957–36	#6–32x 1 1/2" PANHEAD	–
47		16	MS16995–20	#6–32x3/4" SHC	–
46		4	NAS1352N06–6	#6–32x3/8" SHC	–
45		2	NAS1102E04–12	#4–40x3/4" FH SCREW OFF.CRU. 100 DEG	–
44		12	NAS1352C04–8	#4–40x1/2" SHC	–
43		6	NAS1102E04–8	#4–40x1/2" FH SCREW OFF.CRU. 100 DEG	–
42		24	NAS1352C04–5	#4–40x5/16" SHC	–
41		8	NAS1352N04–6	#4–40x3/8" SHC	–
40		666	NAS1102E04–6	#4–40x3/8" FH SCREW OFF.CRU. 100 DEG	–
39		44	NAS1102E04–10	#4–40x5/8" FH SCREW OFF.CRU. 100 DEG	–
38		3	–	MAGNETIC HYSTERESIS RODS	–
37		1	–	RF RECEIVER – AYDIN VECTOR MODEL RCC–103	–
36		1	–	RF TRANSMITTER – AYDIN VECTOR MODEL T–102U	–
35		1	–	RF RELAY – DOWKEY MODEL 401	–
34		1	–	GPS RECEIVER – TRIMBLE #27760	–
33		4	–	GPS ANTENNA – TRIMBLE #16248	–
32		1	2020122	BALANCE RING	–
31		3	2020117	HYSTERESIS ROD HOLDER	–
30		1	2020116	RF RELAY MOUNTING PLATE	–
29		2	2020115	RF MODEM MOUNTING PLATE	–
28		1	2020110	SEPARATION SWITCH ASSEMBLY	–
27		2	2020108	CPU BOX MOUNTING PLATE	–
26		2	2020102	CPU ELECTRONICS BOX	–
25		1	2020098	SECONDARY OPTICS ASSEMBLY	–
24		1	2020097A	CAMERA POSITIONING MECHANISM	–
23		2	2020090	BATTERY BOX ASSEMBLY	–
22		1	2020088	CAMERA MOUNTED BAFFLE	–
21		4	2020086	OUTER RAIL SPACER – FACET 1 AND 5	–
20		1	2020084	BASEPLATE	–
19		4	2020083	LOWER SOLAR ARRAY SUBSTRATE	–
18		8	2020076	OUTER RAIL	–
17		2	2020075	SPACER – FACET 1 AND 5	–
16		2	2020074	SPACER – FACET 3 AND 7	–
15		8	2020061	OVERHANG SUPPORT	–
14		8	2020057	CONNECTOR MOUNTING PLATE	–
13		2	2020056	REACTION WHEEL ASSEMBLY	–
12		2	2020051	OUTER PANEL – FACET 2 AND 6	–
11		2	2020050	OUTER PANEL – FACET 4 AND 8	–
10		2	2020049	OUTER PANEL – FACET 1 AND 5	–
9		2	2020048	OUTER PANEL – FACET 3 AND 7	–
8		1	2020005	MIDDLE TELESCOPE RING	–
7		8	2020004	INNER RAIL	–
6		1	2020003	UPPER TELESCOPE RING	–
5		1	2020002	LOWER TELESCOPE RING	–
4		1	2020000E	PLATE FOR TRANSMITTER/RECEIVER MOUNTING	–
3		1	2020000D	PLATE FOR GPS MOUNTING	–
2		2	2020000C	PLATE FOR REACTION WHEELS AND SPACERS	–
1		8	2020000	INNER FRAME PLATE	–
–			GD2020121	SIMPLESAT	–

LIST OF MATERIAL

THIS DRAWING WAS PRODUCED USING:
SOFTWARE: AUTOCAD VERSION: 14
FILE NAME: 2020121_1.DWG

NONE	SIMPLESAT
NEXT ASSY	USED ON

NATIONAL AERONAUTICS AND SPACE ADMINISTRATION — Goddard Space Flight Center — GREENBELT, MARYLAND

UNLESS OTHERWISE SPECIFIED–DIMENSIONS ARE IN INCHES
TOLERANCES: .XX ±.01 .XXX ±.005 ∠ ±1° FRACTIONS ±1/16 63
REMOVE ALL BURRS AND SHARP EDGES .010R OR CHAMFER MAX.

☐ FLIGHT HARDWARE/POST FAB HARDNESS TEST REQUIRED
☒ HARDNESS TEST NOT REQUIRED
☐ TEST HARDNESS PER ASTM E–18, LOCATION OPTIONAL
☐ TEST HARDNESS PER ASTM E–18 WHERE INDICATED ON FIELD OF DRAWING THUS ⊛
☒ NO NON–DESTRUCTIVE EXAMINATION (NDE) REQUIRED
☐ NDE REQUIRED PER S–313–009 CODE _____

NAME	INIT	DATE
DESIGNER W. WELCH		
DRAWN W. WELCH		
CHECKED –		
APPROVED D SKILLMAN		
APPROVED –		
APPROVED –		
APPROVED–ENGINEER –		

DRAWING INTERPRETED PER GSFC–X673–64–1E

TITLE ASSEMBLY, SPACECRAFT, SIMPLESAT

GD 2020121 –

CODE 924 SCALE 1/4 WT SH 1 OF 3

GD2020121 1